AL WIRING DIAGRAM

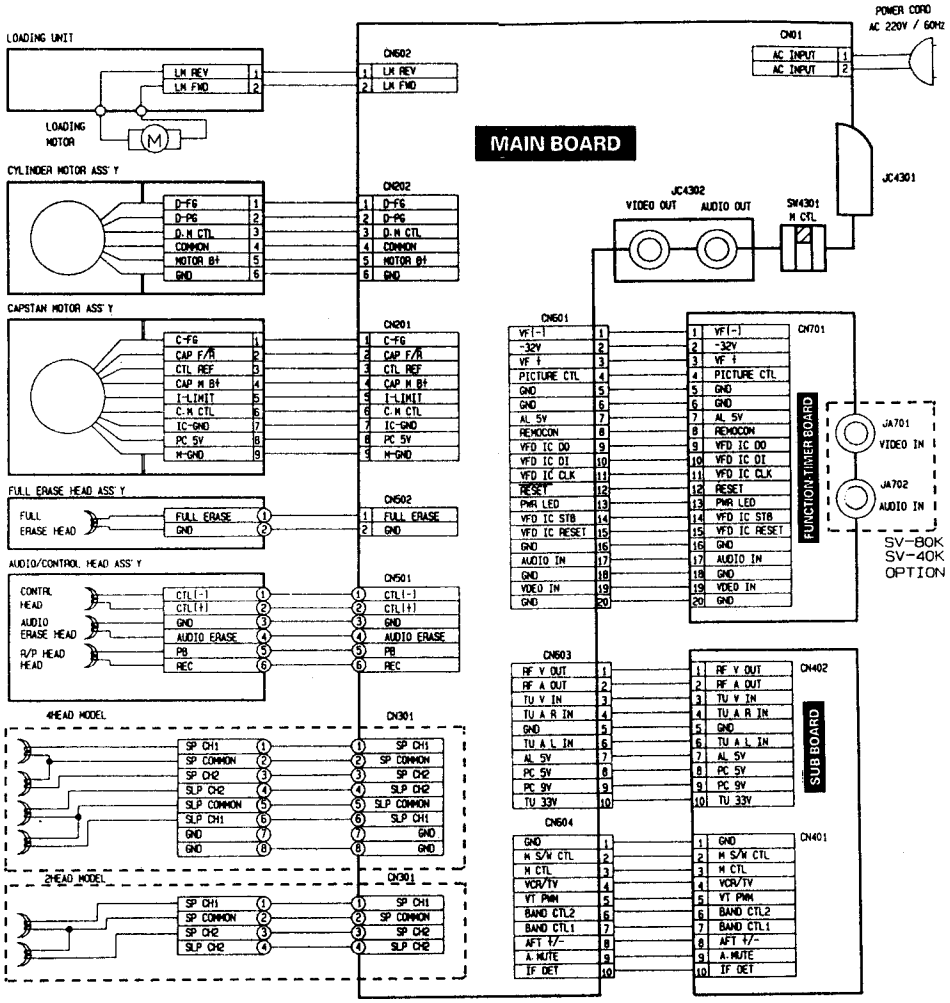

OVERALL BLOCK DIAGRAM

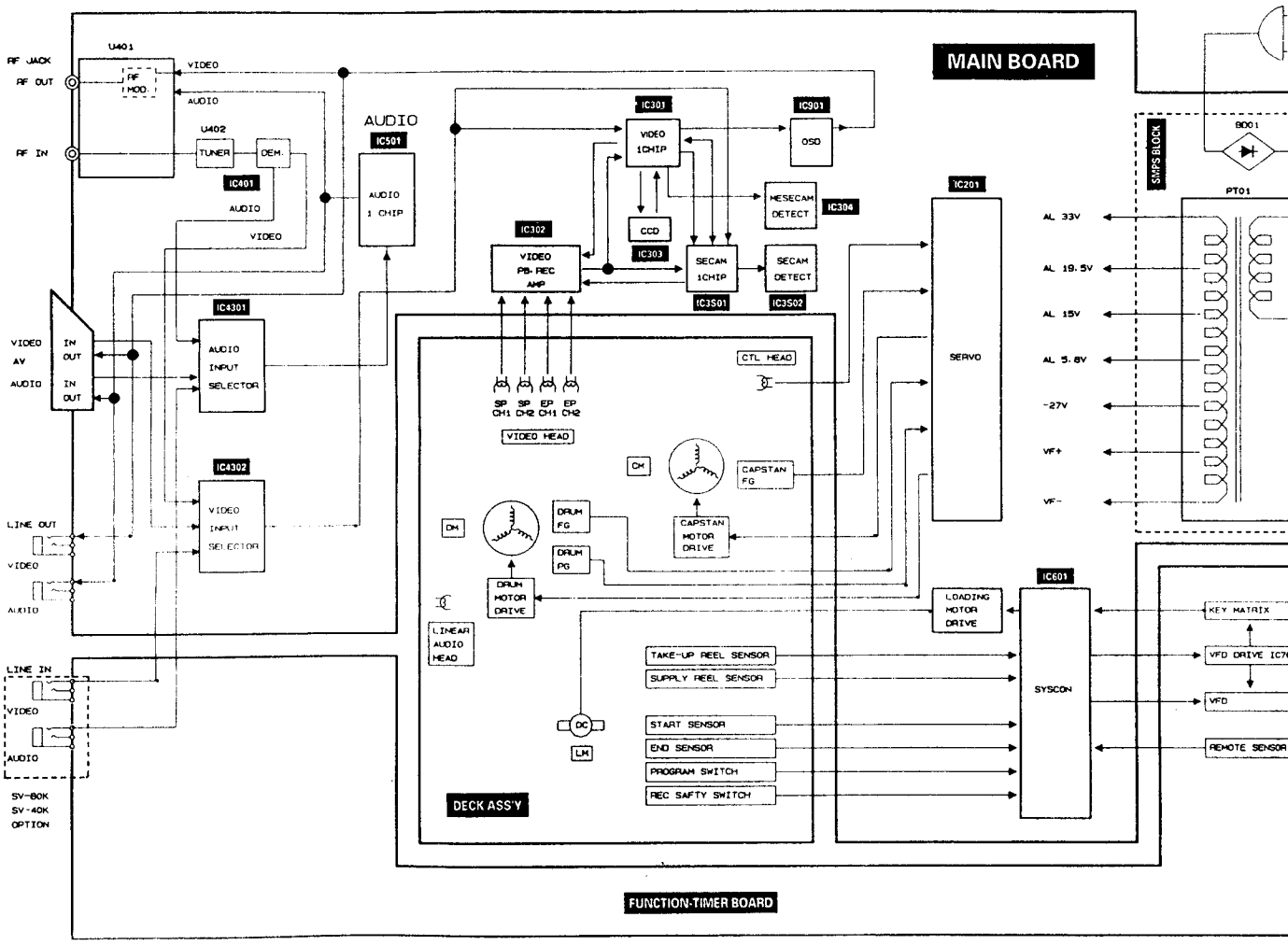

VIDEO CASSETTE RECORDER

SV-30K/40K/70K/80K
SVR-30D/40D/70D/80D

VHS
PAL SECAM

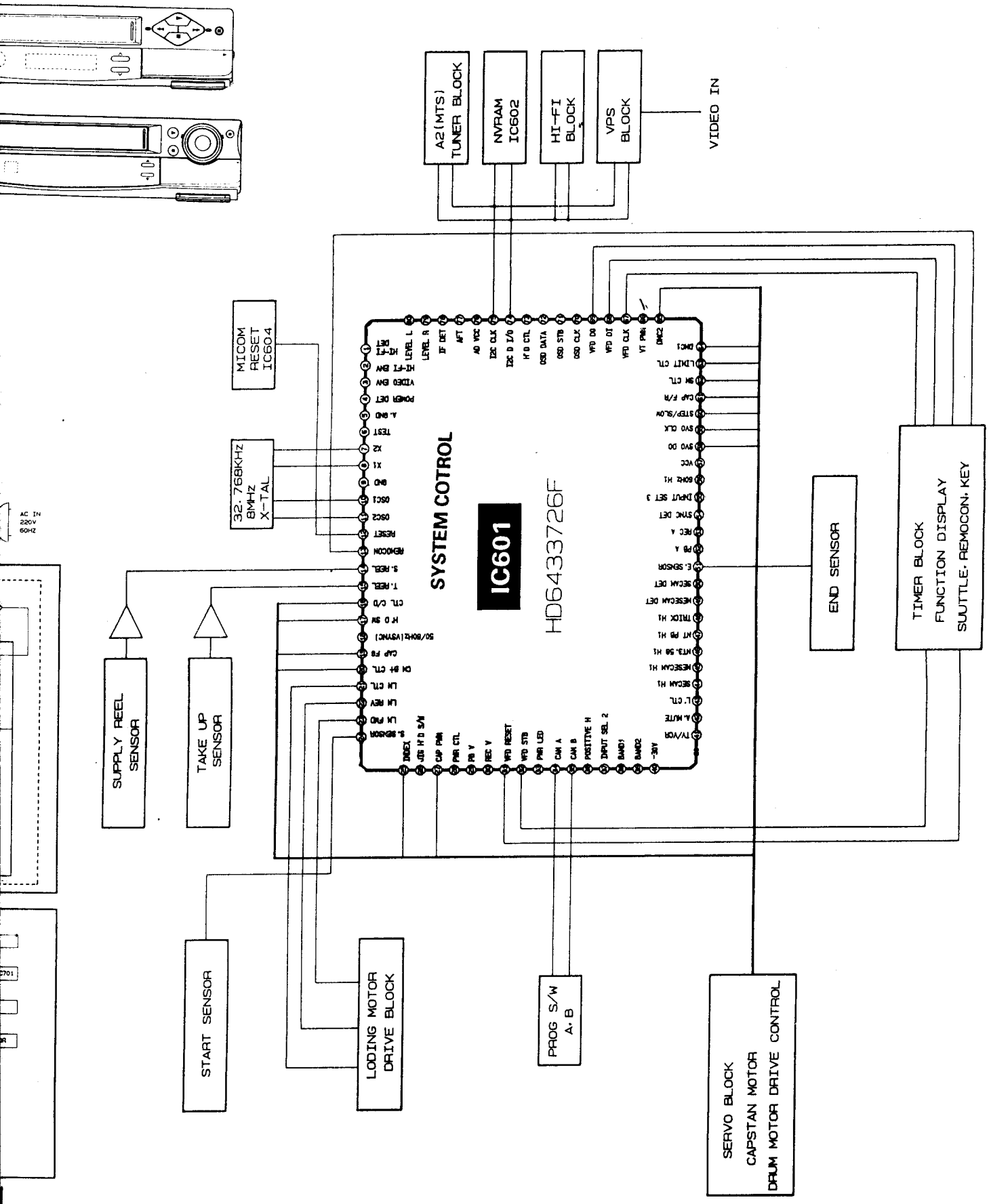

VIDEO/PRE-AMP

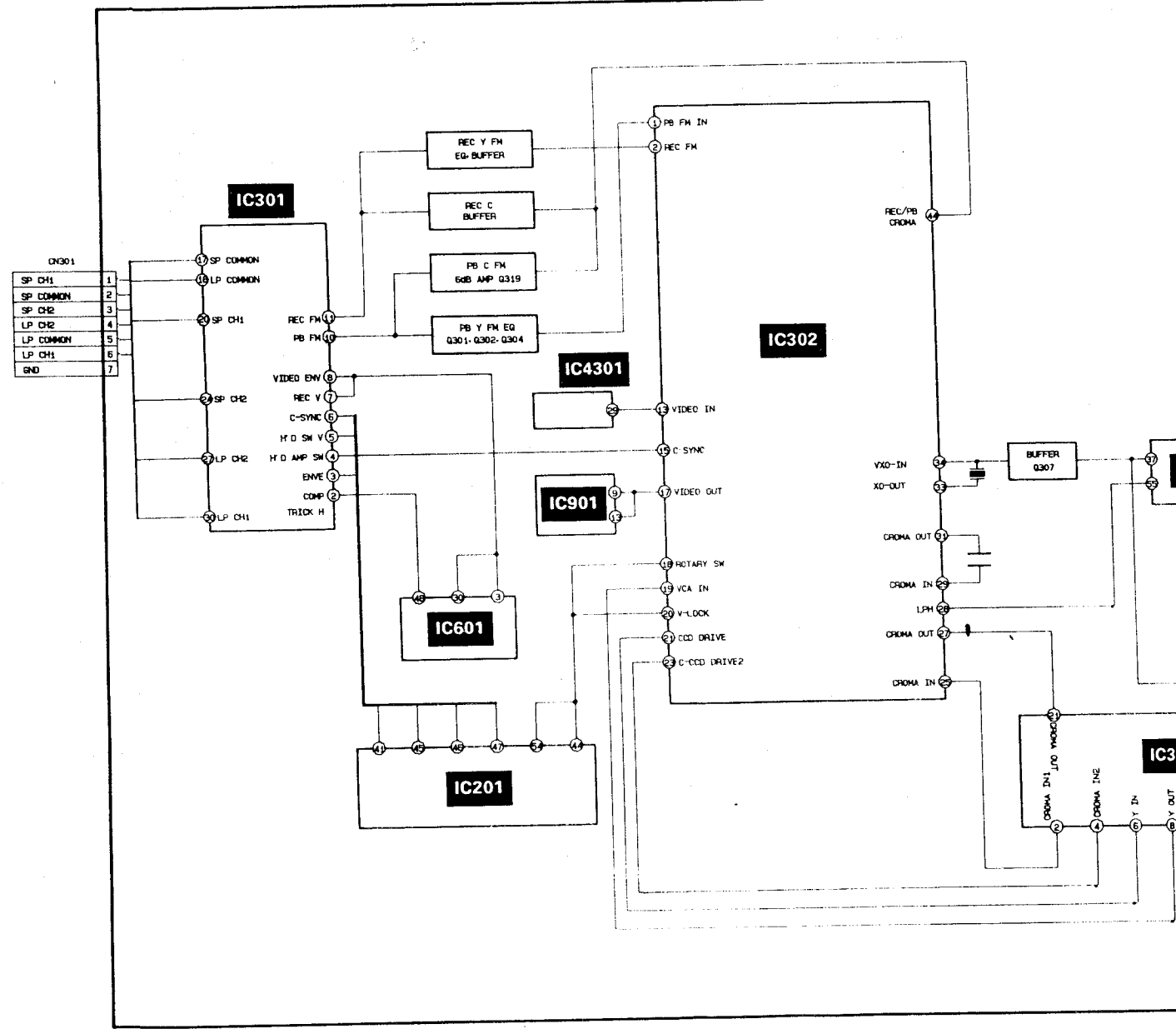

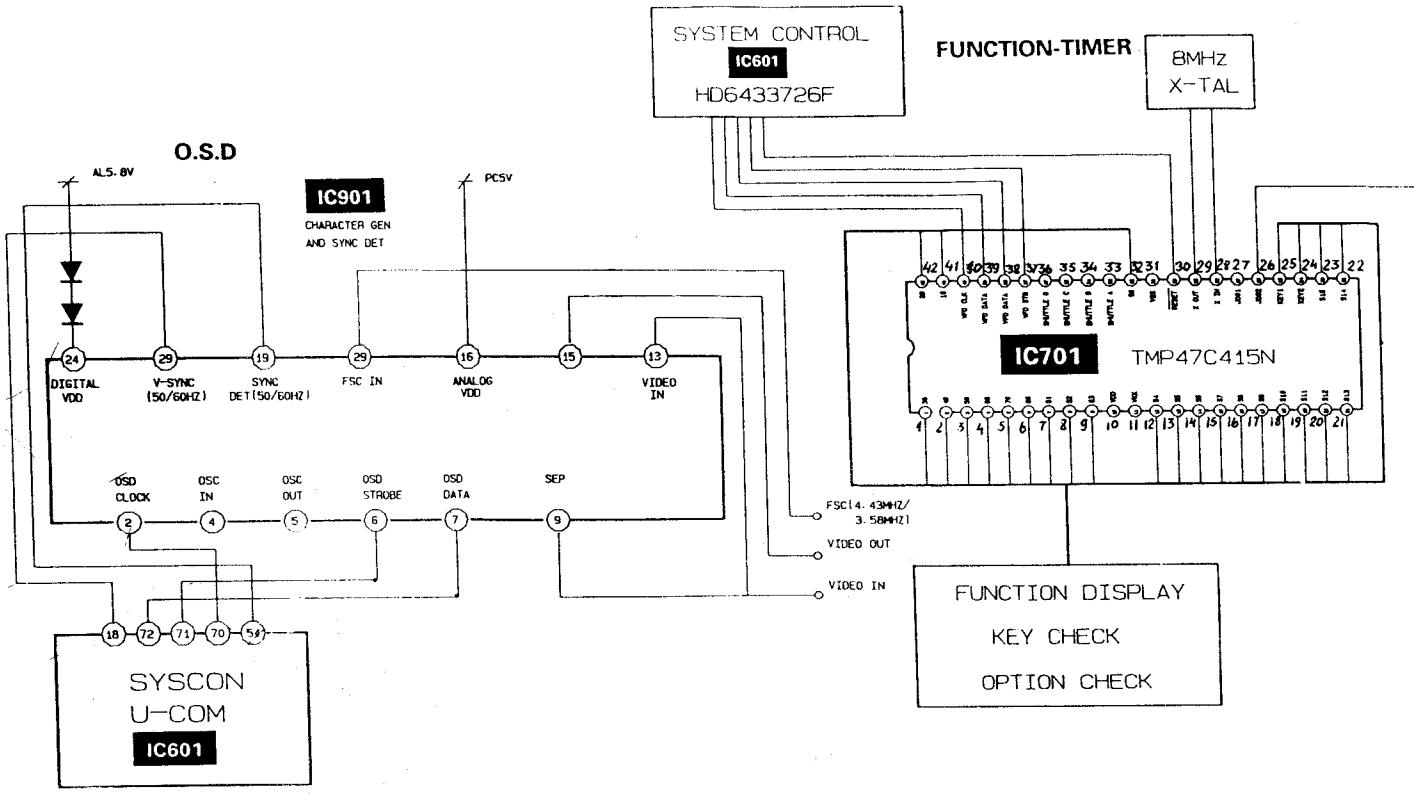

10-1. SMPS

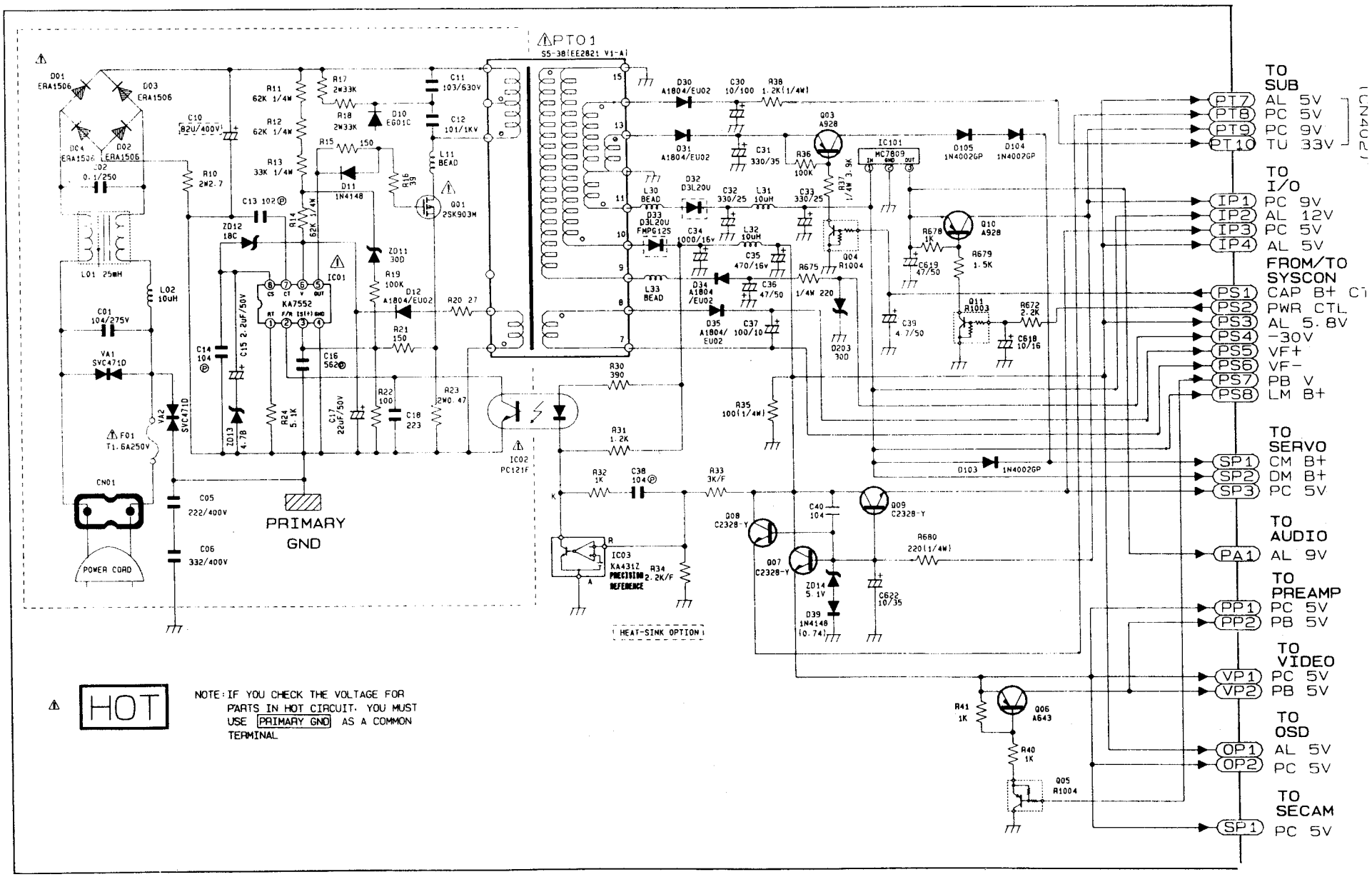
PT01
S5-38(EE2821 V1-A)
KA7552
MC7809
PRIMARY GND
POWER CORD
HEAT-SINK OPTION
HOT
NOTE: IF YOU CHECK THE VOLTAGE FOR PARTS IN HOT CIRCUIT. YOU MUST USE PRIMARY GND AS A COMMON TERMINAL
TO SUB
PT7 AL 5V
PT8 PC 5V
PT9 PC 9V
PT10 TU 33V
TO I/O
IP1 PC 9V
IP2 AL 12V
IP3 PC 5V
IP4 AL 5V
FROM/TO SYSCON
PS1 CAP B+
PS2 PWR CTL
PS3 AL 5.8V
PS4 -30V
PS5 VF+
PS6 VF-
PS7 PB V
PS8 LM B+
TO SERVO
SP1 CM B+
SP2 DM B+
SP3 PC 5V
TO AUDIO
PA1 AL 9V
TO PREAMP
PP1 PC 5V
PP2 PB 5V
TO VIDEO
VP1 PC 5V
VP2 PB 5V
TO OSD
OP1 AL 5V
OP2 PC 5V
TO SECAM
SP1 PC 5V

SYSTEM COTROL

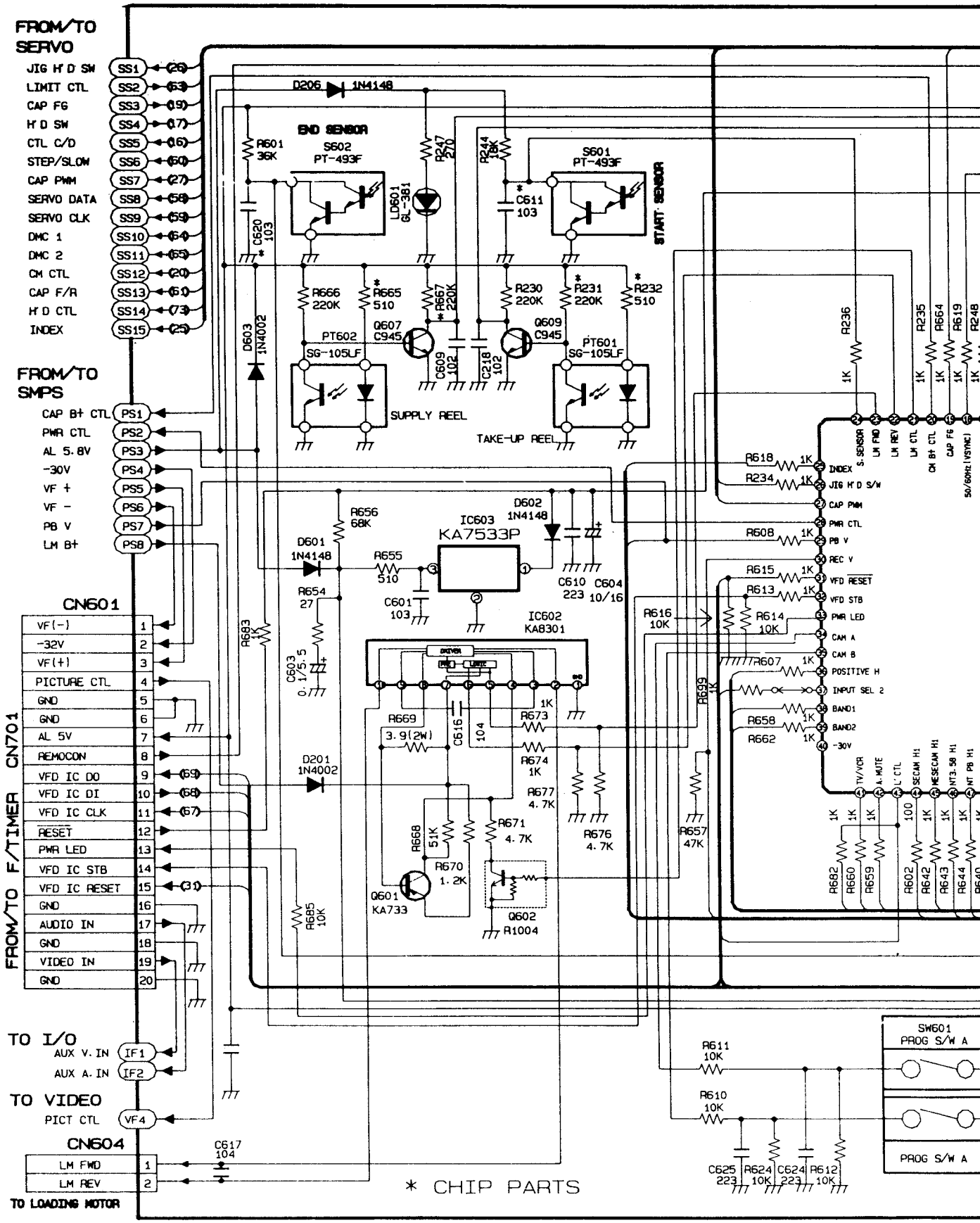

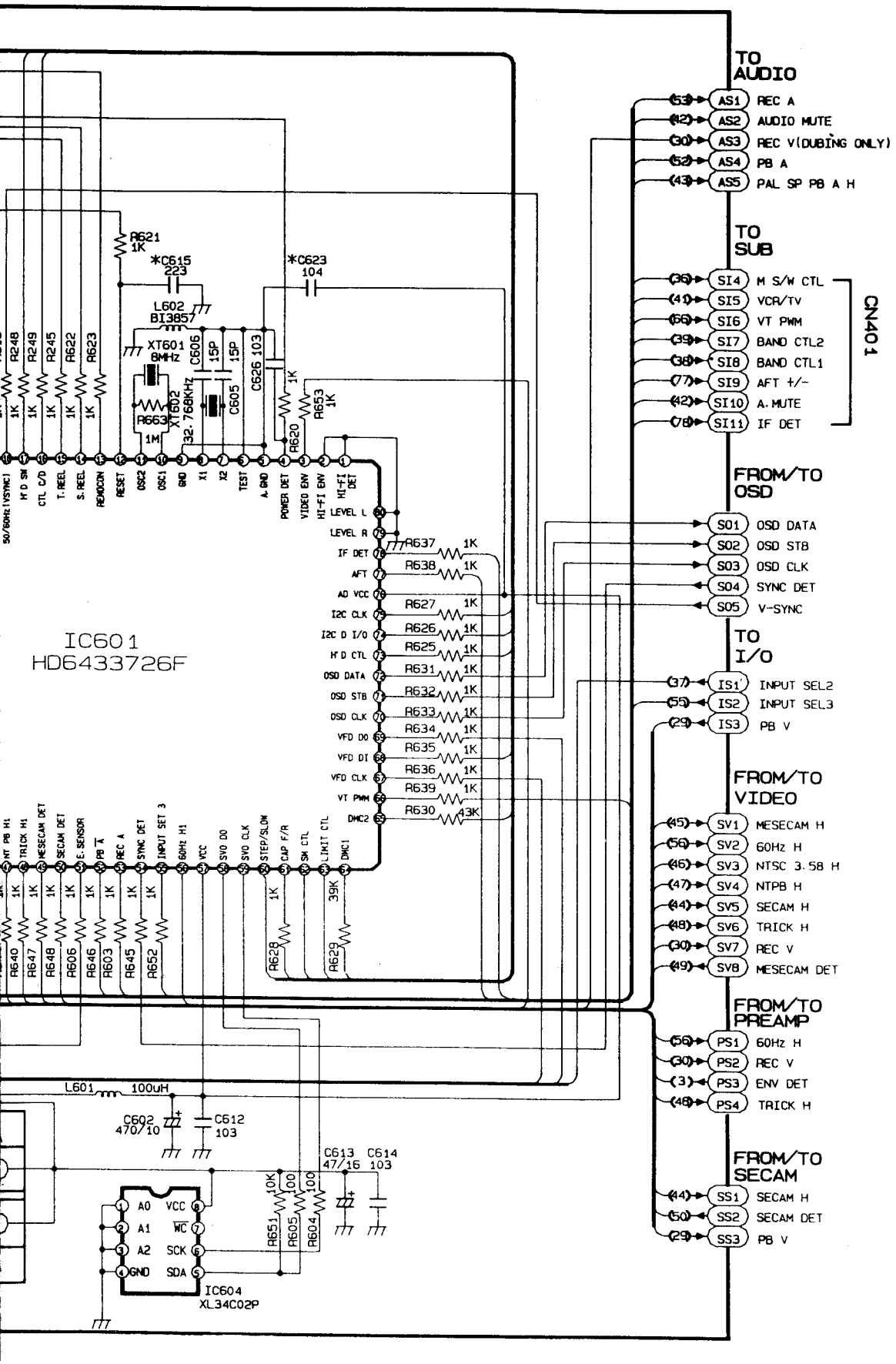

MODE NO	STOP	REC	PLAY
IC601			
1	0/5	0/5	0/5
2	0	0	2.5
3	2.5	2.5	2.5
4	5.0	5.0	5.0
5	0	0	0
6	0	0	0
7	2.4	2.4	2.4
8	1.0	1.0	1.0
9	0	0	0
10	3.6	3.6	3.6
11	4.0	4.0	4.0
12	5.0	5.0	5.0
13	5.0	5.0	5.0
14	0	0/5	0/5
15	0	0/5	0/5
16	0	0/5	0/5
17	0	0/5	0/5
18	0	0	0
19	0	0/5	0/5
20	0	0	0
21	5.0	5.0	5.0
22	5.0	5.0	5.0
23	5.0	5.0	5.0
24	5.0	5.0	5.0
25	0	0	0
26	0	0	0
27	5.0	5.0	5.0
28	5.0	5.0	5.0
29	0	0	5.0
30	0.6	5.0	0.6
31	5.0	5.0	5.0
32	0/5	0/5	0/5
33	5.0	5.0	5.0
34	5.0	5.0	5.0
35	0	0	0
36	0	0	0
37	0	0	0
38	0	0	0.1
39	5.0	5.0	5.0
40	0	0	0
41	5.0	5.0	5.0
42	0	0	0
43	0	0	0
44	0	0	0
45	0	0	0
46	0	0	0
47	0	0	0
48	0	0	0
49	0	0	0
50	0	0	0
51	5.0	5.0	5.0
52	5.0	5.0	0
53	0	5.0	0
54	5.0	5.0	5.0
55	0	0	0
56	0	0	0
57	5.0	5.0	5.0
58	0/5	0/5	0/5
59	0/5	0/5	0/5
60	0	0	0
61	5.0	5.0	5.0
62	0	5.0	5.0
63	0	2.5	2.5
64	2.2	2.2	2.2
65	2.2	2.2	2.2
66	0/5	0/5	0/5
67	0/5	0/5	0/5
68	0/5	0/5	0/5
69	0/5	0/5	0/5
70	5.0	5.0	5.0
71	5.0	5.0	5.0
72	0	0	0
73	0	0	0
74	0/5	0/5	0/5
75	0/5	0/5	0/5
76	5.0	5.0	5.0
77	4.6	4.6	4.6
78	4.6	4.6	4.6
79	4.5	4.5	4.5
80	4.0	4.0	4.0

VIDEO

RED ——— PB Y PROCESS
- - - - PB C PROCESS

BLUE ——— P
- - - - P

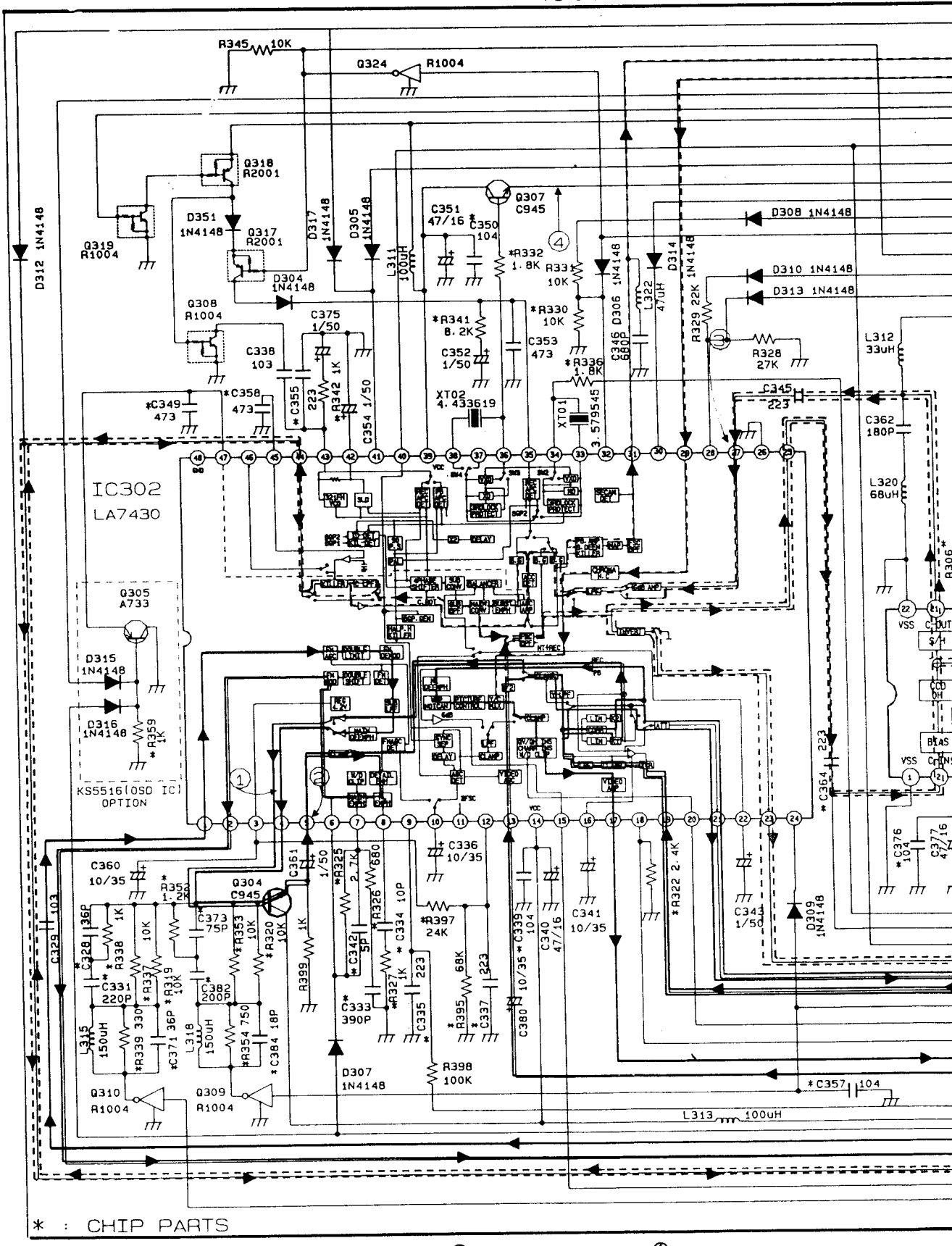

①

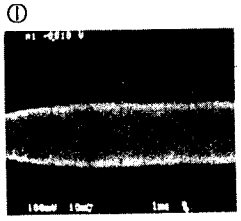

IC302-4
300mVp-p
PLAY

②

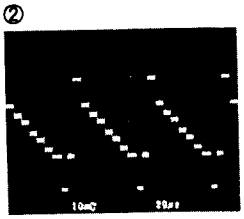

IC302-5
500mVp-p
REC

③

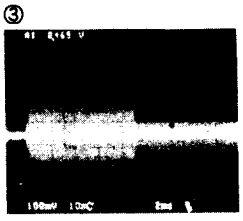

IC302-27
260mVp-p
PB

④

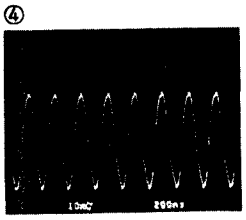

Q307-Emitter
420mVp-p
E/E, PB, REC

REC Y PROCESS
REC C PROCESS

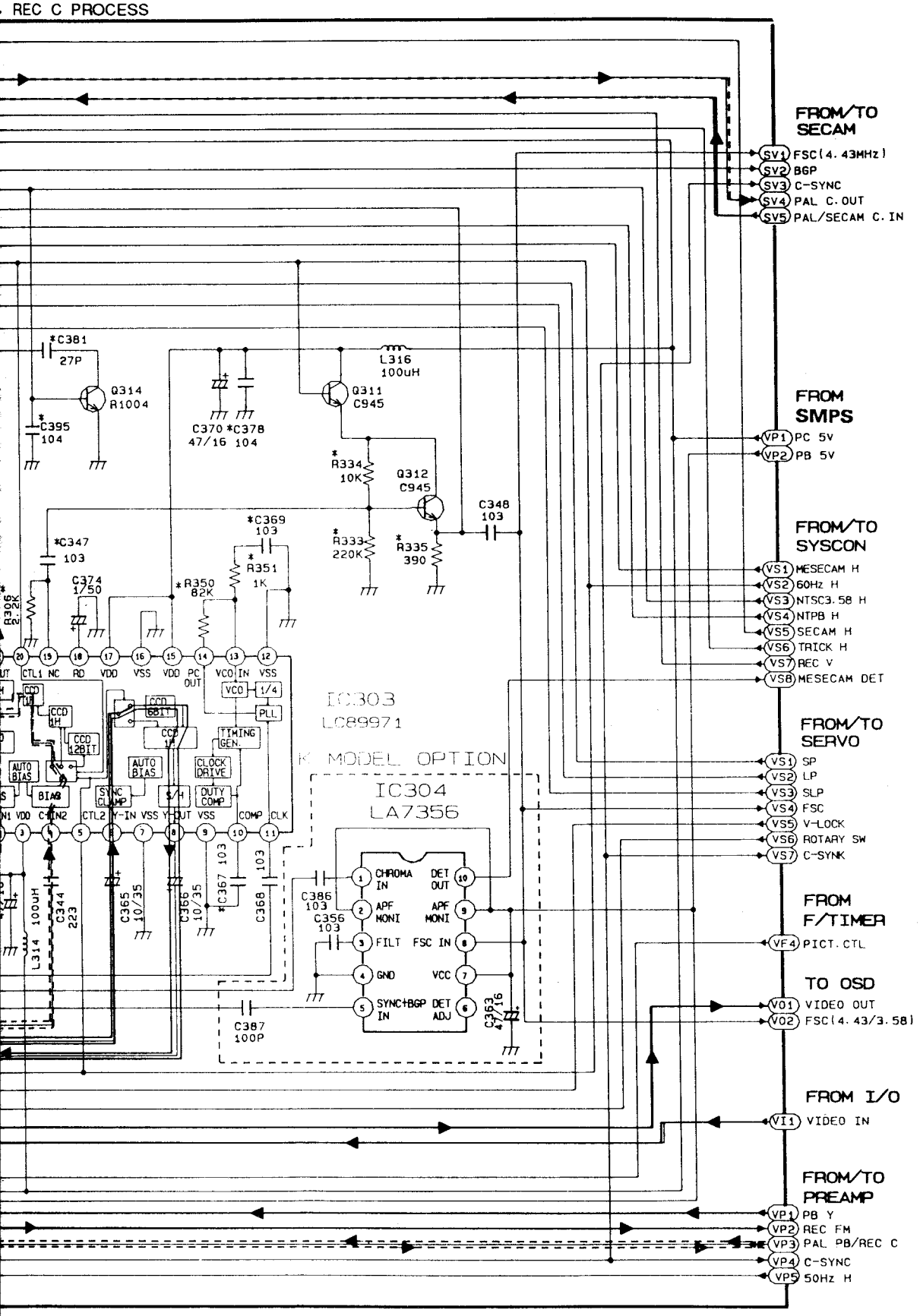

MODE / PIN NO	E/E	PLAY	REC
IC302			
1	3.0	3.6	3.0
2	2.4	3.6	2.5
3	4.2	4.2	4.2
4	2.1	3.2	2.1
5	2.8	3.0	2.8
6	2.0	4.4	2.8
7	2.0	4.4	2.0
8	2.6	2.8	2.6
9	2.5	2.5	2.5
10	1.4	1.5	1.5
11	2.0	2.0	0
12	2.8	2.8	2.8
13	2.6	3.1	2.6
14	5.0	5.0	5.0
15	0	0	0
15	3.1	3.1	3.1
17	0.8	0.9	0.9
18	0	0	0
19	2.0	2.0	2.0
20	0	0	0
21	1.0	1.0	1.0
22	2.2	2.2	2.2
23	2.5	2.4	2.4
24	0	0	0
25	2.5	2.5	2.4
26	0	0	0
27	2.5	2.4	2.5
28	0.8	2.5	0.8
29	1.9	1.8	1.9
30	0	0	0
31	0.4	2.4	0.4
32	0.4	0.4	0.4
33	3.6	3.6	3.6
34	2.5	2.4	2.5
35	2.0	2.0	2.2
36	2.5	2.5	2.5
37	0	0	0
38	3.8	3.8	3.8
39	5.0	5.0	5.0
40	0	0	0
41	0.3	0.3	0.3
42	3.0	3.0	3.0
43	2.8	2.8	2.8
44	2.3	3.2	2.2
45	0	2.0	2.0
46	4.2	0	0
47	0.6	1.2	1.8
48	0	0	0

MODE / PIN NO	E/E	PLAY	REC
IC303			
1	0	0	0
2	2.2	2.0	2.2
3	5.0	5.0	5.0
4	2.2	2.0	2.2
5	0	0	0
6	2.2	2.2	2.2
7	0	0	0
8	1.0	1.0	1.0
9	0	0	0
10	2.4	2.4	2.4
11	1.0	1.0	1.0
12	0	0	0
13	2.0	2.0	2.0
14	2.0	2.0	2.0
15	5.0	5.0	5.0
16	0	0	0
17	5.0	5.0	5.0
18	8.5	8.5	8.5
19	3.2	3.2	3.2
20	0	0	0
21	1.4	1.4	1.2
22	0	0	0

10-3. SERVO

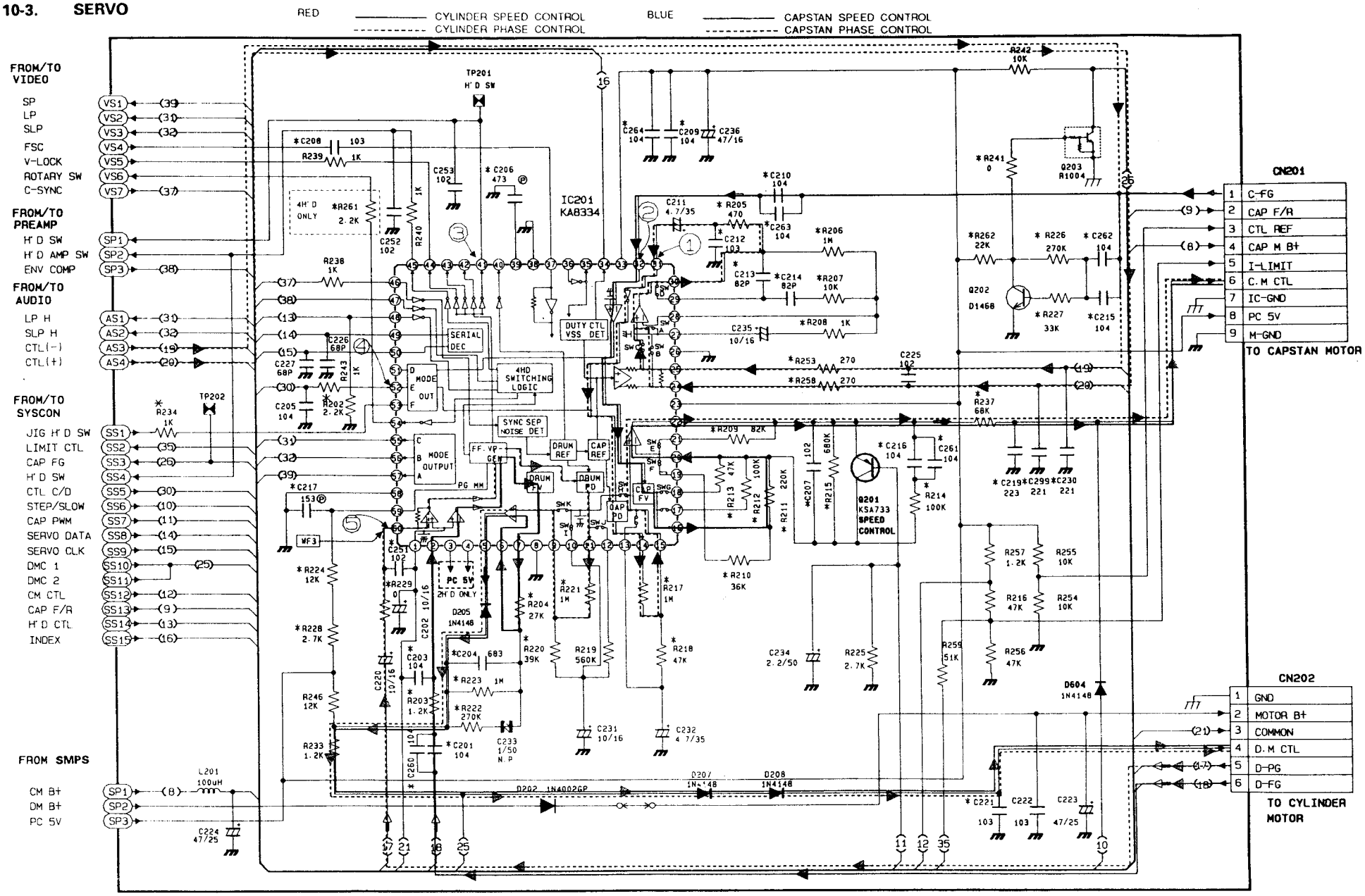

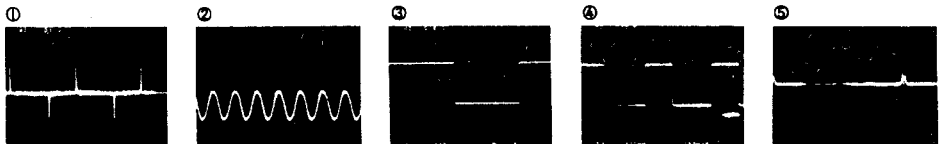

MODE / PIN NO	E/E	P/P	V/V	D/D	S/S	M/M	L/L	F/F	R/R	C/C	A/A	B/B	IC301
1	2.0	2.0	2.0	2.0	2.0	2.0	2.0	2.0	2.0	2.0	2.0	2.0	
2	2.0	2.0	2.0	2.0	2.0	2.0	2.0	2.0	2.0	2.0	2.0	2.0	
3	0	0	0	0	0	0	0	0	0	0	0	0	
4	0	0	0	0	0	0	0	0	0	0	0	0	
5	0	0	0	0	0	0	0	0	0	0	0	0	
6	0.1	0.1	0.1	0.1	0.1	0.1	0.1	0.1	0.1	0.1	0.1	0.1	
7	0	0	0	0	0	0	0	0	0	0	0	0	
8	0.3	0.3	0.3	0.3	0.3	0.3	0.3	0.3	0.3	0.3	0.3	0.3	
9	0	0	0	0	0	0	0	0	0	0	0	0	
10	2.2	2.2	2.2	2.2	2.2	2.2	2.2	2.2	2.2	2.2	2.2	2.2	
11	0	0	0	0	0	0	0	0	0	0	0	0	
12	0	0	0	0	0	0	0	0	0	0	0	0	
13	2.5	2.5	2.5	2.5	2.5	2.5	2.5	2.5	2.5	2.5	2.5	2.5	
14	5.0	5.0	5.0	5.0	5.0	5.0	5.0	5.0	5.0	5.0	5.0	5.0	
15	5.0	5.0	5.0	5.0	5.0	5.0	5.0	5.0	5.0	5.0	5.0	5.0	
16	0	0	0	0	0	0	0	0	0	0	0	0	
17	0	0	0	0	0	0	0	0	0	0	0	0	
18	0	0	0	0	0	0	0	0	0	0	0	0	
19	2.0	2.0	2.0	2.0	2.0	2.0	2.0	2.0	2.0	2.0	2.0	2.0	
20	0.6	0.6	0.6	0.6	0.6	0.6	0.6	0.6	0.6	0.6	0.6	0.6	
21	0	0	0	0	0	0	0	0	0	0	0	0	
22	2.0	2.0	2.0	2.0	2.0	2.0	2.0	2.0	2.0	2.0	2.0	2.0	
23	0.6	0.6	0.6	0.6	0.6	0.6	0.6	0.6	0.6	0.6	0.6	0.6	
24	0	0	0	0	0	0	0	0	0	0	0	0	
25	0	0	0	0	0	0	0	0	0	0	0	0	
26	0	0	0	0	0	0	0	0	0	0	0	0	
27	0.6	0.6	0.6	0.6	0.6	0.6	0.6	0.6	0.6	0.6	0.6	0.6	
28	2.0	2.0	2.0	2.0	2.0	2.0	2.0	2.0	2.0	2.0	2.0	2.0	
29	0	0	0	0	0	0	0	0	0	0	0	0	
30	0.6	0.6	0.6	0.6	0.6	0.6	0.6	0.6	0.6	0.6	0.6	0.6	

IC201-31
3.2Vp-p
PB

IC201-32
2Vp-p
PB

IC201-41
5Vp-p
PB

IC201-52
5Vp-p
PB

IC201-60
420mVp-p
PB

PLAY	REC
2.0	3.6
2.0	2.0
0	1.2
0	0
0	0
0.1	0.1
0	4.5
2.2	0
0	0
2.2	3.2
0	3.2
0	1.6
2.5	2.5
5.0	4.0
5.0	5.0
0	1.5
0	2.3
0	0
2.0	3.6
0.6	0.1
0	4.0
2.0	3.6
0.6	0
0	4.0
0	0
0	0
0.6	0.1
2.0	3.6
0	0
0.6	0.1

10-5. PRE-AMP

RED ——— PB Y PROCESS
- - - - - PB C PROCESS
BLUE ——— REC Y PROCESS
- - - - - REC C PROCESS

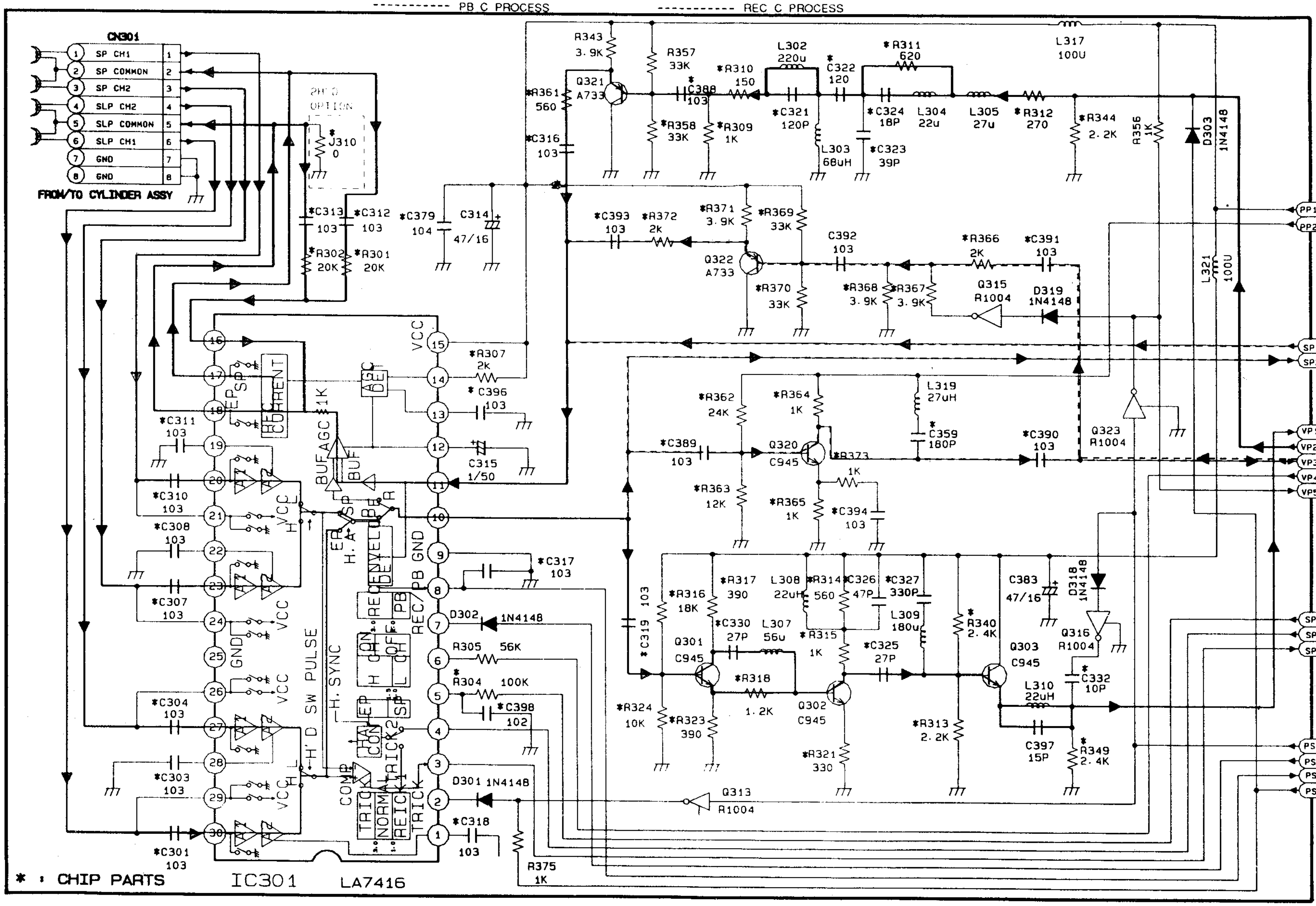

AUDIO

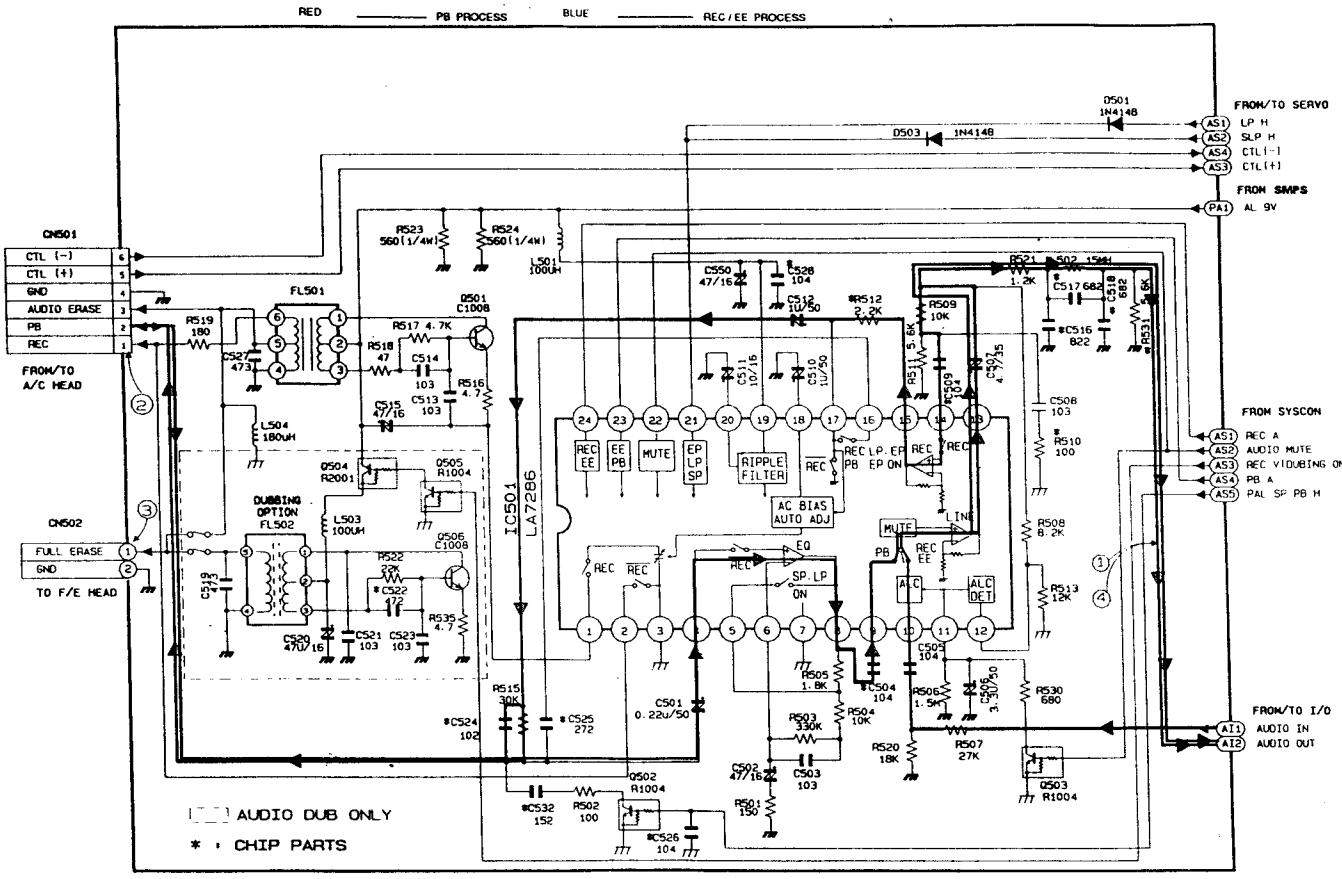

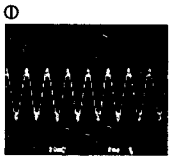

① R531-Audio Out 0.7Vp-p PB

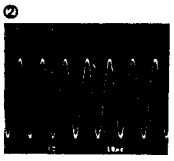

② CN501-1 50Vp-p REC

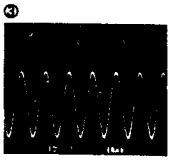

③ CN502-1 40Vp-p REC

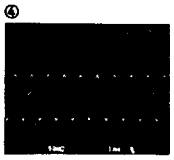

④ R531-Audio Out 1.45Vp-p E/E, REC

SECAM

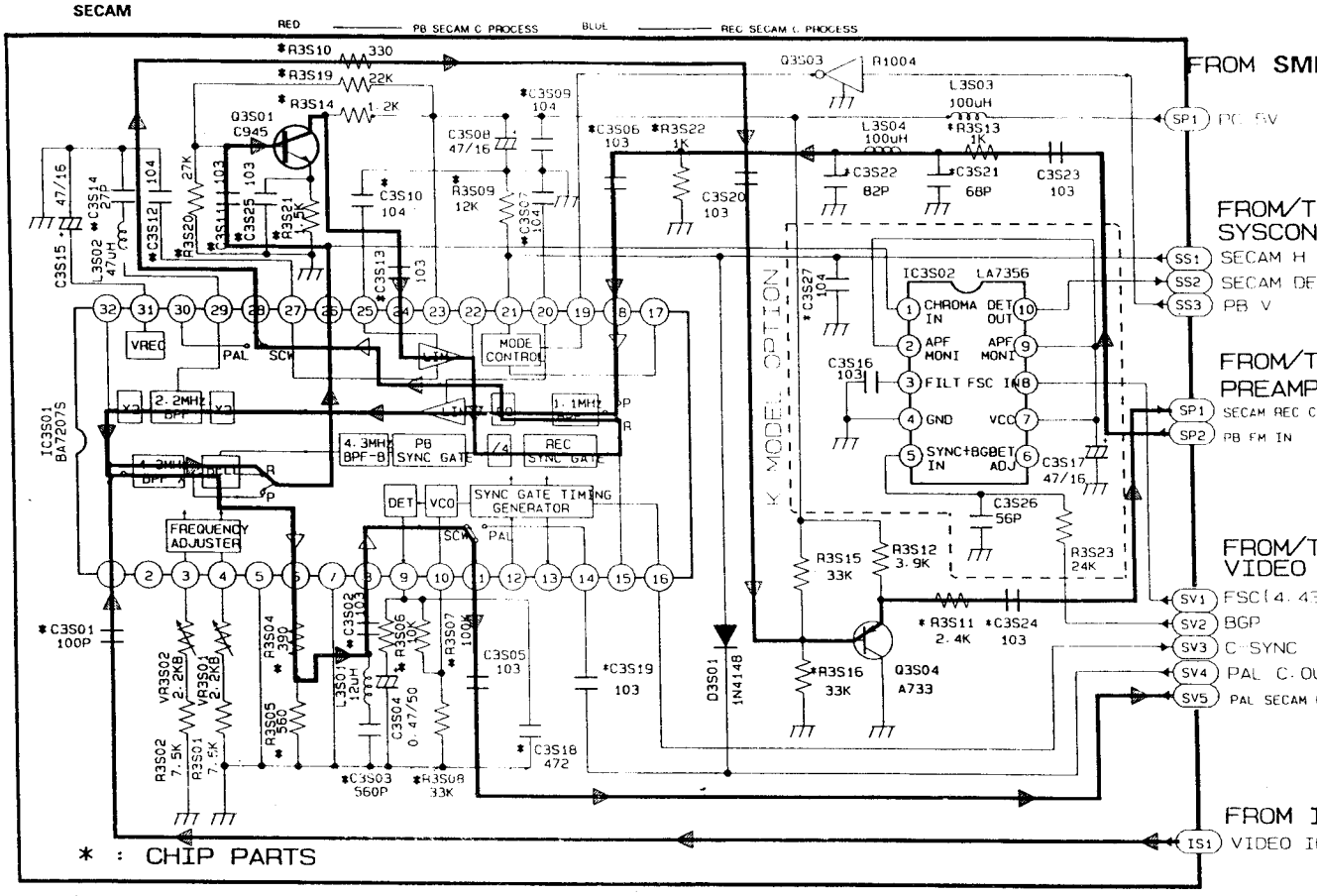

MODE / PIN NO	STOP	REC	PLAY
IC501			
1	9.0	4.0	9.0
2	0	0	0
3	0	0	0
4	4.0	4.0	4.0
5	4.0	4.0	4.0
6	4.0	4.0	4.0
7	0	0	0
8	4.0	4.0	4.0
9	4.0	4.0	4.0
10	4.0	4.0	4.0
11	0.5	0.5	0
12	0	0	0
13	4.0	4.0	4.0
14	4.0	4.0	4.0
15	4.0	4.0	4.0
16	0	4.0	0
17	4.0	4.0	4.0
18	0	0.8	0
19	9.0	9.0	9.0
20	9.0	9.0	9.0
21	0	0	0
22	0.8	0.8	0.8
23	4.5	4.5	0.8
24	0	5.0	0

MODE / PIN NO	STOP	REC	PLAY
Q501			
E	9.0	4.0	9.0
B	9.0	2.5	9.0
C	9.0	8.9	9.0
Q502			
E	0	0	0
B	0.3	0	0.3
C	0.3	8.7	0.3
Q503			
E	0	0	0
B	0	4.9	0
C	9.0	0	9.0
Q504			
E	8.9	8.9	8.9
B	8.9	0	8.9
C	0.2	8.8	0.2
Q505			
E	0	0	0
B	0	0	0
C	0	0	0
Q506			
E	0	0	0
B	0.8	0.8	0.8
C	0.5	0.5	0

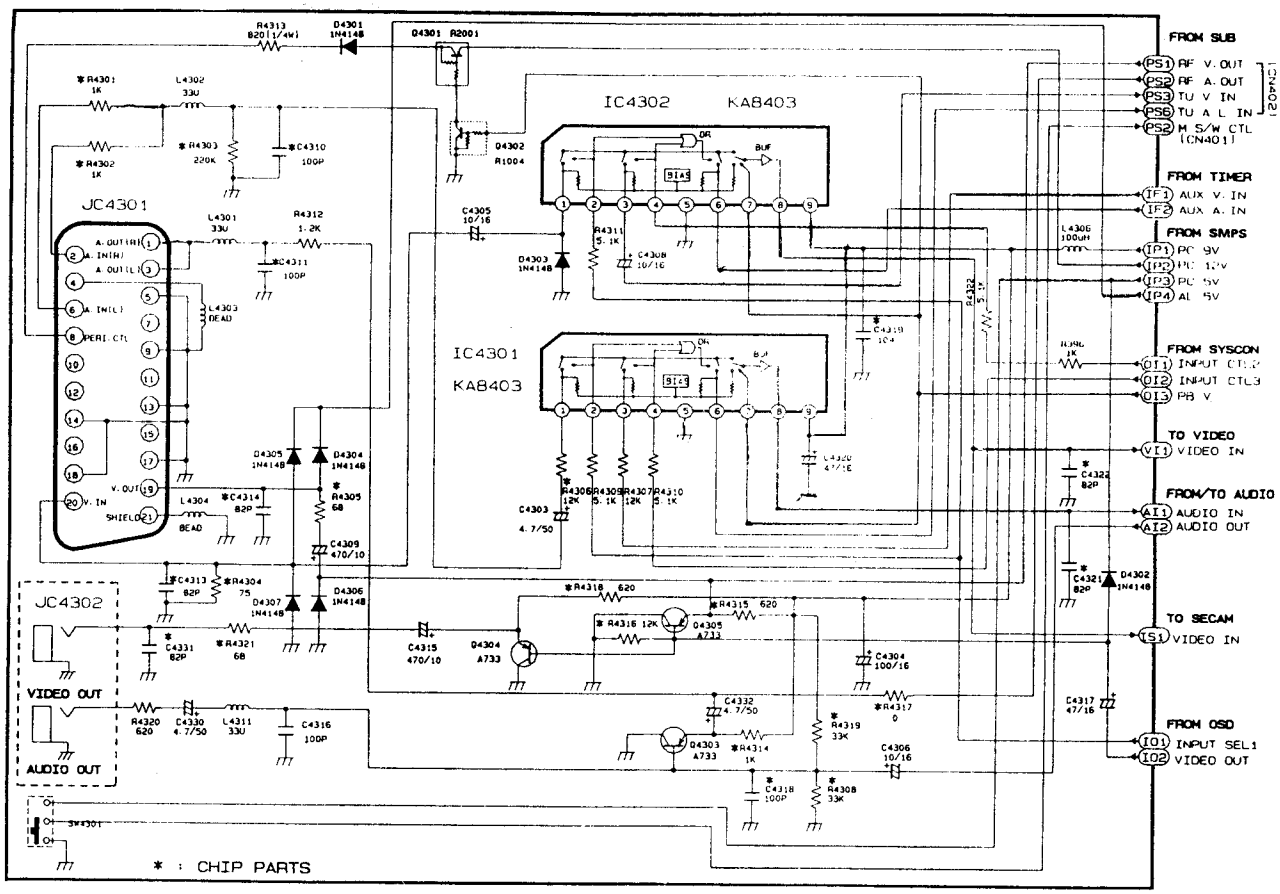

MODE / PIN NO	E-E	BLUE
IC901		
1	0	0
2	0 - 4	0 - 4
3	3.6	3.6
4	7MHZ 4Vp-p	7MHZ 4Vp-p
5	7MHZ 3Vp-p	7MHZ 3Vp-p
6	0 - 4	0 - 4
7	0 - 4	0 - 4
8	0 - 4.2	0 - 4.2
9	1.6	1.6
10	0	0
11	1.8	1.8
12	2.4	2.4V / 1.2V
13	1.8	1.5V
14	1.8	0
15	2.0	2.0
16	5.0	5.0
17	FSC 1.6Vp-p	FSC 1.6Vp-p
18	5.2	5.2
19	5.0	0
20	0	0
21	0	0
22	0	0
23	0 / 4.4	4.4V
24	5.2	5.2V

O.S.D

RED ——— PB PROCESS
- - - - REC PROCESS

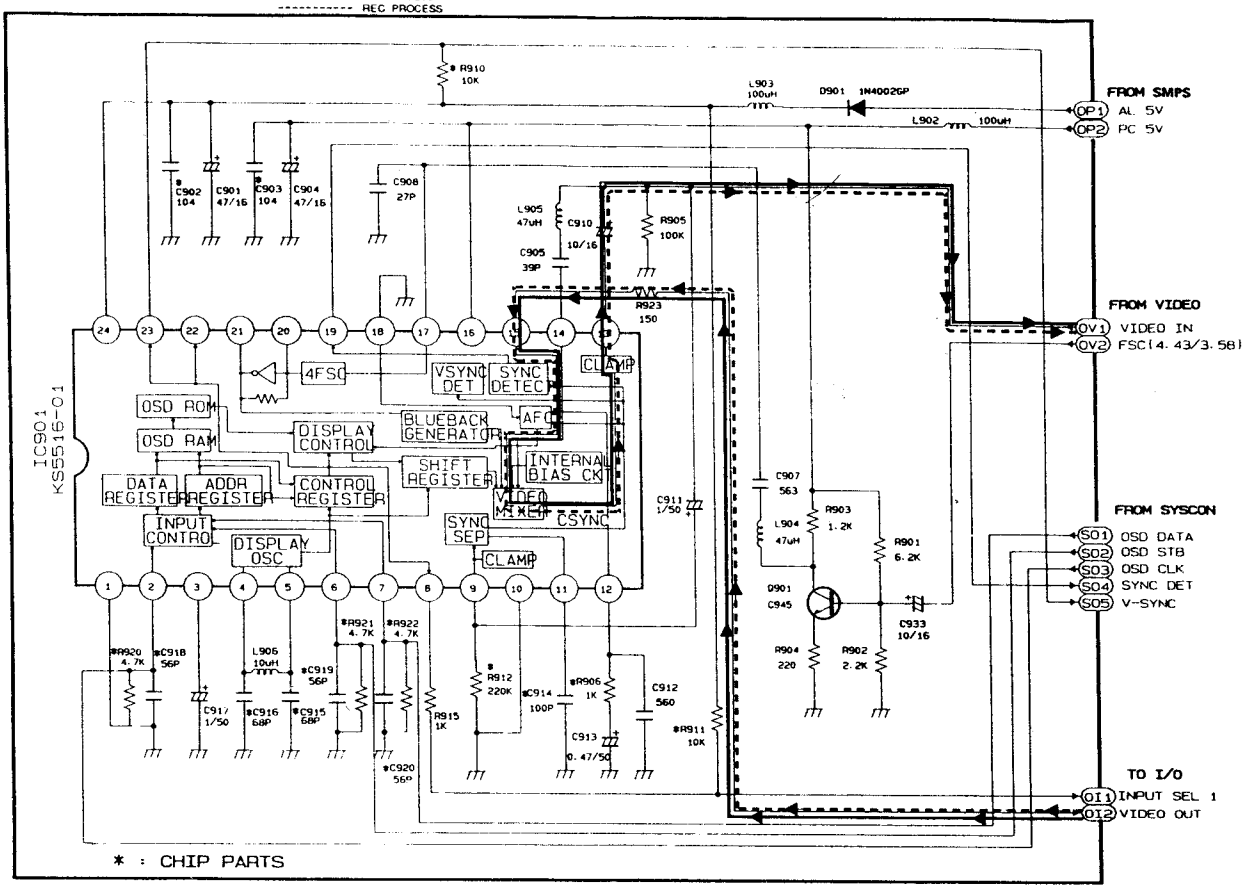

SECAM

MODE / PIN NO	STOP	REC	PLAY
IC3S01			
1	2.4	2.4	2.4
2	5.0	5.0	5.0
3	1.8	1.8	1.8
4	1.8	1.8	1.8
5	0	0	0
6	1.8	1.8	1.8
7	0	0	0
8	3.0	3.0	3.0
9	1.8	1.8	1.8
10	2.0	2.0	2.0
11	2.3	2.3	2.3
12	2.4	2.4	2.4
13	2.4	2.4	2.4
14	3.0	3.0	3.0
15	5.0	5.0	5.0
16	4.2	4.2	4.2
17	4.8	4.8	4.8
18	2.5	2.5	2.5
19	4.8	4.8	0
20	0	0	2.5
21	4.8	4.8	4.8
22	5.0	5.0	5.0
23	5.0	5.0	5.0
24	2.0	2.0	2.0
25	2.0	2.0	2.0
26	2.0	2.0	2.0
27	2.3	2.3	2.3
28	2.4	2.4	2.4
29	1.0	1.0	1.8
30	3.0	3.0	3.0
31	2.5	2.5	2.5
32	5.0	5.0	5.0

SUB

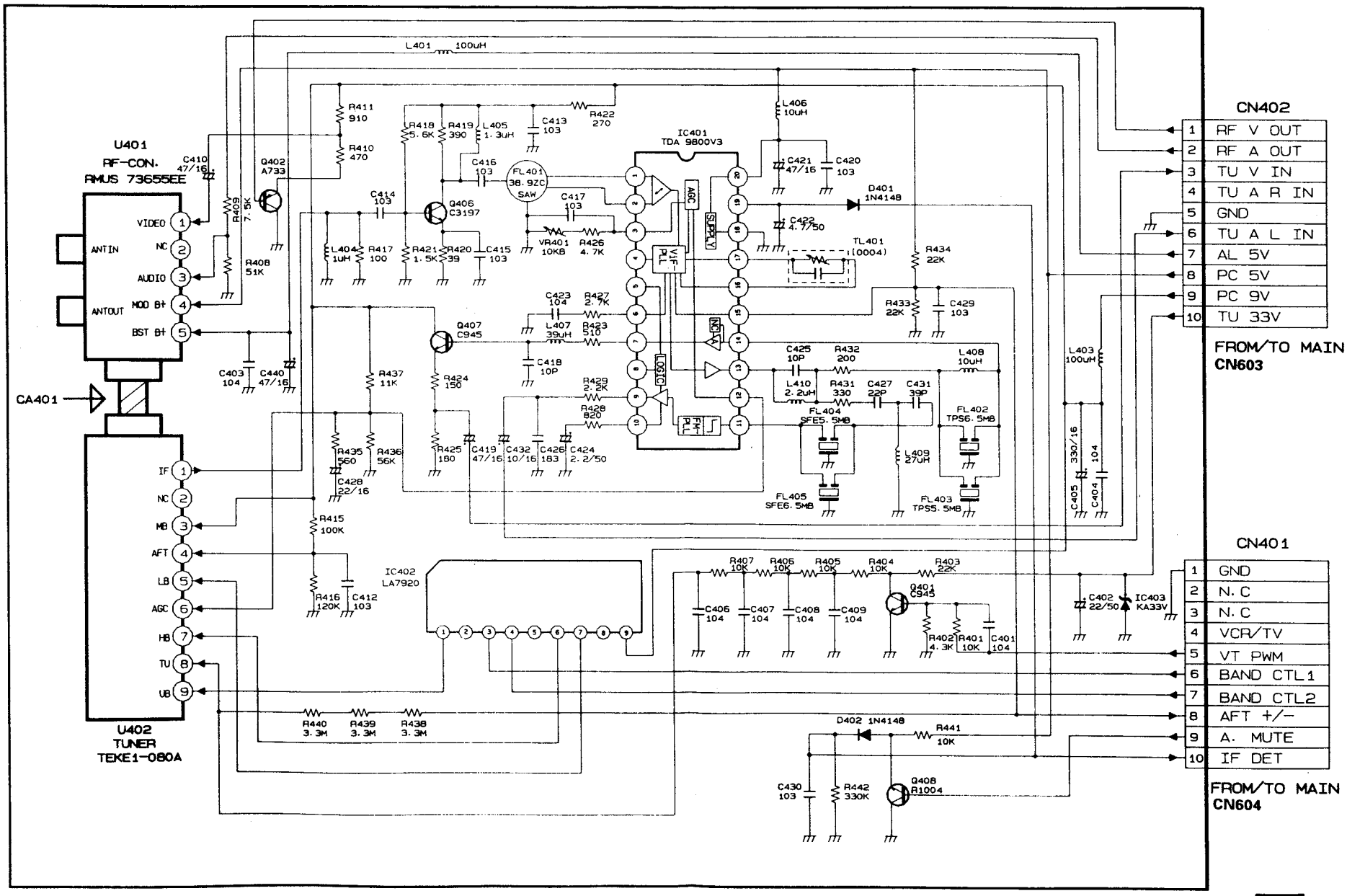

SERV

PIN NO.	MODE / IC201	STOP	REC
1	2.5	2.4	2.5
2	2.5	2.5	2.5
3	2.5	2.5	2.5
4	2.5	2.5	2.5
5	1.6	1.6	1.6
6	2.5	2.5	2.5
7	2.5	2.5	2.5
8	0	0	0
9	2.5	2.5	2.5
10	1.8	0.2	2.5
11	2.5	2.5	2.5
12	2.3	2.3	2.3
13	5.0	5.0	5.0
14	5.0	2.5	2.5
15	2.5	2.5	2.5
16	0	0	0
17	0.8	2.5	2.5
18	0.1	2.5	2.5
19	1.1	2.5	2.5
20	5.0	2.6	2.6
21	5.0	2.6	2.6
22	5.0	5.0	5.0
23	0	0	0
24	2.5	2.5	2.5
25	2.5	2.8	2.5
26	0	0	0
27	2.5	2.5	2.5
28	2.5	2.5	2.5
29	2.5	2.5	2.5
30	2.5	2.5	2.5
31	2.5	2.5	2.5
32	2.5	2.5	2.5
33	5.0	5.0	5.0
34	5.0	3.0	2.5
35	5.0	5.0	5.0
36	0	0	0
37	2.4	2.4	2.4
38	0	0	0
39	4.9	4.9	4.9
40	2.5	2.5	2.5
41	2.4	2.4	2.4
42	2.4	0	2.4
43	2.4	2.4	2.4
44	0	0	0
45	4.9	0	4.9
46	2.7	2.7	2.7
47	0.8	0.8	0.8
48	0.9	0.9	0.9
49	0.5	0.6	0.5
50	0.7	0.7	0.7
51	0	2.3	2.3
52	4.9	4.9	1.1
53	0	0	0
54	2.3	2.3	2.3
55	0	0	0
56	0	0	0
57	4.8	4.8	4.8
58	0	0	0
59	0	0.3	0
60	2.4	2.4	2.4
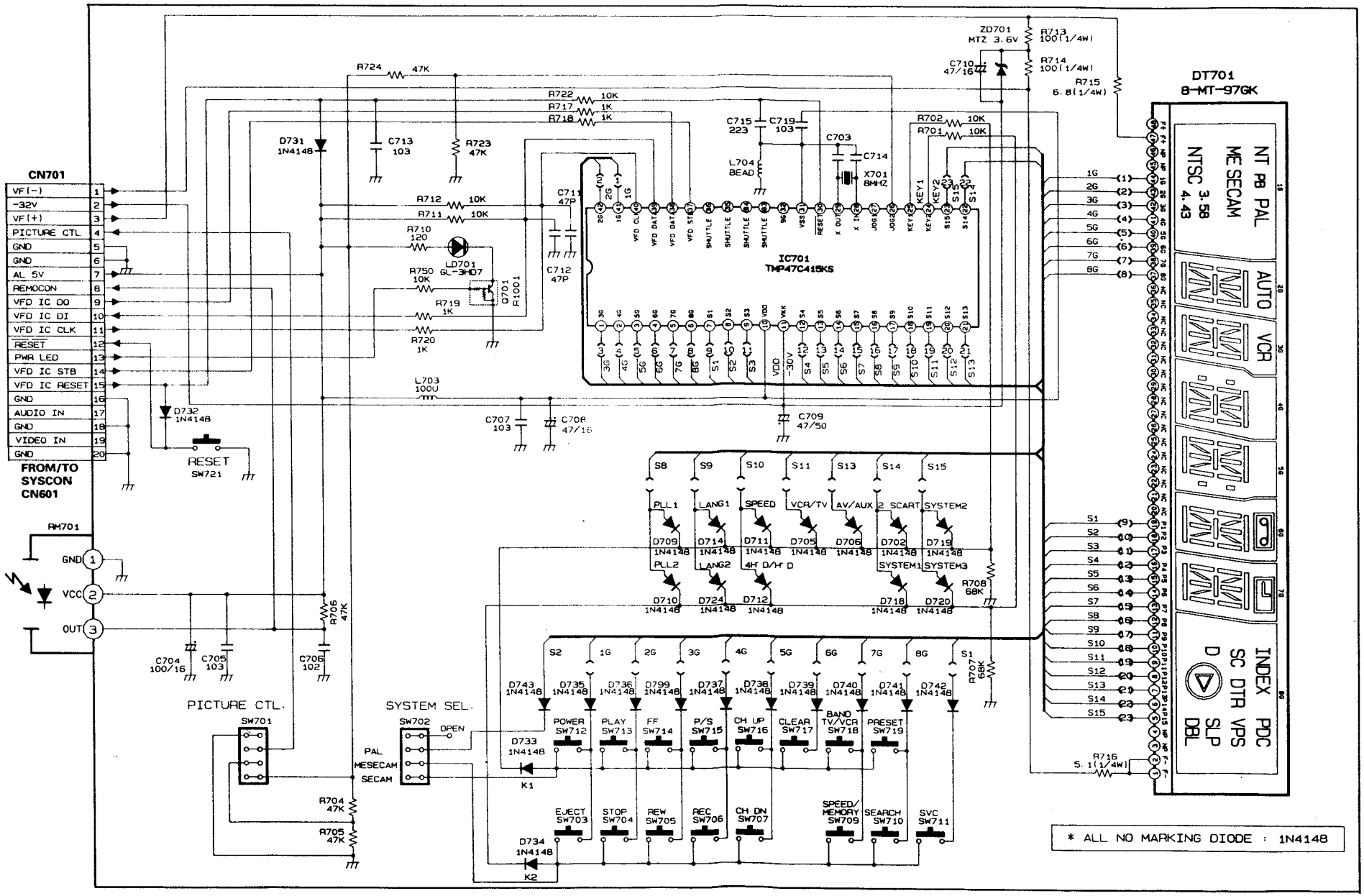
10-11. FUNCTION-TIMER (SV-30K/70K/SVR-30D/70D)